ValWell
DEVELOPMENT ENTERPRISE CO., LTD.

R8

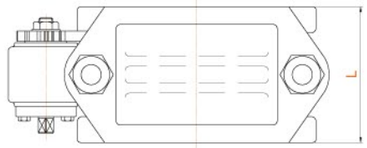

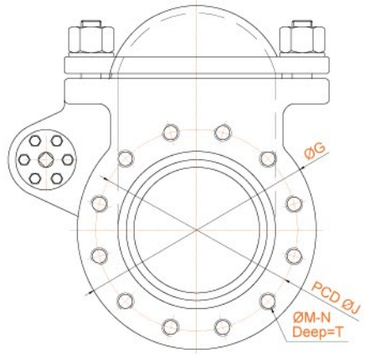

Size |
DN50~DN300(2"~12")
Pressure class |
DIN PN10 / 16 / 25 / 40
JIS 10K / 16K / 20K / 30K
ANSI 150LBS

TAIWAN PATENT NO.M33807

CHINA PATENT NO.ZL 2008 2 0002101.2

DIMENSIONS

Unit:mm

SIZE		øG	øJ	L	øM	N	T
2"	JIS 10K	155.0	120.0	154.0	M16	4	16.0
	JIS 16K	155.0	120.0	154.0	M16	8	16.0
	JIS 20K	155.0	120.0	154.0	M16	8	16.0
2-1/2"	JIS 10K	175.0	140.0	154.0	M16	4	18.0
	JIS 16K	175.0	140.0	154.0	M16	8	18.0
	JIS 20K	175.0	140.0	154.0	M16	8	18.0
3"	JIS 10K	185.0	150.0	154.0	M16	8	18.0
	JIS 16K	200.0	160.0	154.0	M20	8	18.0
	JIS 20K	200.0	160.0	154.0	M20	8	18.0
4"	JIS 10K	210.0	175.0	162.0	M16	8	18.0
	JIS 16K	225.0	185.0	162.0	M20	8	20.0
	JIS 20K	225.0	185.0	162.0	M20	8	20.0
5"	JIS 10K	250.0	210.0	162.0	M20	8	20.0
	JIS 16K	270.0	225.0	162.0	M22	8	20.0
	JIS 20K	270.0	225.0	162.0	M22	8	20.0
6"	JIS 10K	280.0	240.0	162.0	M20	8	20.0
	JIS 16K	305.0	260.0	162.0	M22	12	20.0
	JIS 20K	305.0	260.0	162.0	M22	12	20.0
8"	JIS 10K	330.0	290.0	162.0	M20	12	22.0
	JIS 16K	350.0	305.0	162.0	M22	12	23.0
	JIS 20K	350.0	305.0	162.0	M22	12	23.0
10"	JIS 10K	400.0	355.0	200.0	M22	12	24.0
	JIS 16K	430.0	380.0	200.0	M24	12	28.0
	JIS 20K	430.0	380.0	200.0	M24	12	28.0
12"	JIS 10K	445.0	400.0	200.0	M22	16	24.0
	JIS 16K	480.0	430.0	200.0	M24	16	28.0
	JIS 20K	480.0	430.0	200.0	M24	16	28.0

DIMENSIONS

Unit:mm

SIZE		øG	øJ	L	øM	N	T
2"	PN 10	165.0	125.0	154.0	M16	4	18.0
	PN 16	165.0	125.0	154.0	M16	4	18.0
	PN 25	165.0	125.0	154.0	M16	4	18.0
	PN 40	165.0	125.0	154.0	M16	4	18.0
2-1/2"	PN 10	185.0	145.0	154.0	M16	4	18.0
	PN 16	185.0	145.0	154.0	M16	4	18.0
	PN 25	185.0	145.0	154.0	M16	8	18.0
	PN 40	185.0	145.0	154.0	M16	8	18.0
3"	PN 10	200.0	160.0	154.0	M16	8	18.0
	PN 16	200.0	160.0	154.0	M16	8	18.0
	PN 25	200.0	160.0	154.0	M16	8	18.0
	PN 40	200.0	160.0	154.0	M16	8	18.0
4"	PN 10	220.0	180.0	162.0	M16	8	20.0
	PN 16	220.0	180.0	162.0	M16	8	20.0
	PN 25	235.0	190.0	162.0	M20	8	20.0
	PN 40	235.0	190.0	162.0	M20	8	20.0
5"	PN 10	250.0	210.0	162.0	M16	8	22.0
	PN 16	250.0	210.0	162.0	M16	8	22.0
	PN 25	270.0	220.0	162.0	M24	8	22.0
	PN 40	270.0	220.0	162.0	M24	8	22.0
6"	PN 10	285.0	240.0	162.0	M20	8	22.0
	PN 16	285.0	240.0	162.0	M20	8	22.0
	PN 25	300.0	250.0	162.0	M24	8	22.0
	PN 40	300.0	250.0	162.0	M24	8	22.0
8"	PN 10	340.0	295.0	162.0	M20	8	24.0
	PN 16	340.0	295.0	162.0	M20	12	24.0
	PN 25	360.0	310.0	162.0	M24	12	24.0
	PN 40	375.0	320.0	162.0	M27	12	24.0
10"	PN 10	395.0	350.0	200.0	M20	12	26.0
	PN 16	405.0	355.0	200.0	M24	12	26.0
	PN 10	425.0	370.0	200.0	M27	12	26.0
	PN 40	450.0	385.0	200.0	M30	12	26.0
12"	PN 10	445.0	400.0	200.0	M20	12	28.0
	PN 16	460.0	410.0	200.0	M24	12	28.0
	PN 10	485.0	430.0	200.0	M27	16	28.0
	PN 40	515.0	450.0	200.0	M30	16	28.0

Blind flanged valve sales point

In various industry

1. Marine
2. Chemical
3. Petrochemical
4. Oil / Gas
5. Offshore

Fluid

1. Fluid
2. Oil
3. Chemical
4. Gas
5. Steam
6. Water

Sale point

S1

1. Quick operation and trouble-free service, In the closed status, any liquid or gas cannot leak to the downstream
2. Untrained one person can operate with ease and safe with 2~12", two people operate with 14~22".
3. Simple and solid structure needs minimal maintenance only for sealing gasket replacement
4. It has solid structure and very short face to face dimension.
5. Flange Standard offer: ANSI, DIN, JIS…etc.
6. When disc closed, can remove top cover to check inside valve body.
7. Plug in bottom to leak out extra fluid.

R5

1. Quick operation and trouble-free service, In the closed status, any liquid or gas cannot leak to the downstream
2. Simple and solid structure needs minimal maintenance only for sealing gasket replacement
3. Flange Standard offer: ANSI, DIN, JIS…etc.
4. Operating and keep pipe inside pressure and vacuum
5. Safe operating, damage fluid will be not expose or have leak problem to jeopardizes while labor operate
6. Only one operator, safe time and energy
7. No tools, Turns hand wheel, then swing or sliding the blind plate without tools and cranes.
8. Plug in bottom to leak out extra fluid.

R7

1. Quick operation and trouble-free service, In the closed status, any liquid or gas cannot leak to the downstream
2. Simple and solid structure needs minimal maintenance only for sealing gasket replacement
3. Flange Standard offer: ANSI, DIN, JIS…etc.
4. Operating and keep pipe inside pressure and vacuum
5. Safe operating, damage fluid will be not expose or have leak problem to jeopardizes while labor operate
6. Only one operator, safe time and energy
7. No tools, Turns hand wheel, then swing or sliding the blind plate without tools and cranes.
8. In valve bottom have plug to void surplus fluid.

R8

1. Quick operation and trouble-free service, In the closed status, any liquid or gas cannot leak to the downstream
2. Untrained 1-2 person can operate with ease and safety.
3. Simple and solid structure needs minimal maintenance only for sealing gasket replacement.
4. It has solid structure and very short face to face dimension.
5. Flange Standard offer: ANSI, DIN, JIS…etc.
6. When disc closed, can remove top cover to check inside valve body.
7. In valve bottom have plug to void surplus fluid.
8. When disc closed, can remove top cover to check inside valve body.
9. After disc open can place in side valve, save space.